Vellore Institute of Technology, Chennai Campus
Fall Semester 2024-2025
Basic Electrical and Electronics Engineering
BEEE102L
Digital Assignment 2 -Project Report

Anti Sleep Glasses

MARIYAM SHAJI AMBOOKEN (24BEC1346)

November 12, 2024

1 Objective

- To create a pair of glasses that help keep drivers awake and alert by using smart features like adaptive lighting, making it easier to stay focused and avoid drowsiness.
- To provide a practical tool for people in demanding jobs or situations—like drivers, doctors, or anyone working long hours—to stay safe, productive, and focused when they need it most.

2 Introduction

Introducing Anti-Sleep Glasses, a groundbreaking safety solution designed to tackle drowsiness in just a matter of seconds. These glasses utilize artificial intelligence to analyze eye movements through computer vision. In a short span of seconds, there are sensors that detect the closing of the eye and takes necessary actions to alert the drivers. The glasses are lightweight and ergonomically designed, making them suitable for extended wear. The glasses typically use a combination of sensors and realtime monitoring algorithms to track eye movement, blink patterns, and other physiological indicators that suggest the user is getting tired. When the system detects signs of drowsiness, the glasses can alert the user using visual or auditory cues to help prevent accidents caused by fatigue, particularly for drivers or workers in high-risk environments. The fundamental principle is to monitor and analyze the wearer's behavior, then use an alert system to ensure they remain conscious and attentive.

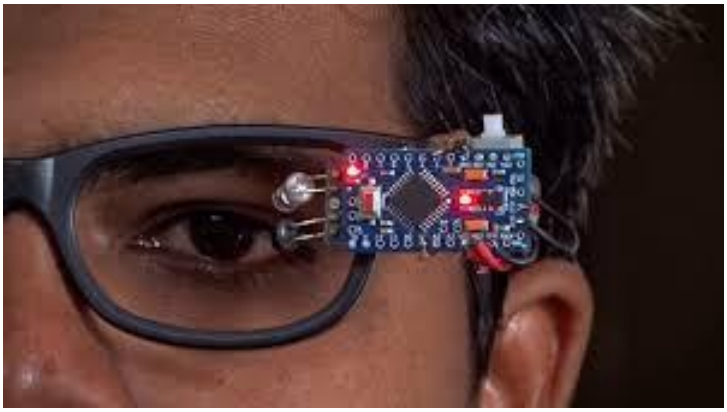

Figure 1: *Anti Sleep Glasses*

3 Working/Components

The key components of anti-sleep glasses include a set of sensors, a micro controller for processing data, and an alert mechanism. The sensors typically consist of:

- Eye Blink Sensor: It detects the blink of human eyes. The main component of eye blink sensor is an IR sensor. The IR Sensor can detect any object within its detection range. But it cannot detect any black color object.

- Arduino Nano: The main component of this project is the Arduino Nano board. The output of the IR sensor is given as input to Arduino. It is programmed in such a way that whenever the high signal from the eye blink sensor is received for more than 3 seconds, the Arduino will turn on the buzzer and vibration motor attached to the output pin of the Arduino. If the high signal comes from the eye blink sensor for less than 3 seconds then the Arduino will not turn on the Buzzer and Vibration Motor attached to its output pin.

- Output (Buzzer and Vibration Motor): To alert the driver we have used a buzzer and a vibration motor which is connected to the output pin of Arduino.

- Power Supply: For the power supply we are using ab 9V battery. it supplies the electrical energy needed to operate the Arduino nano, buzzer and other components.

- Switch: It connects the components and makes a stable connection to perform the operation.

4 Block Diagram

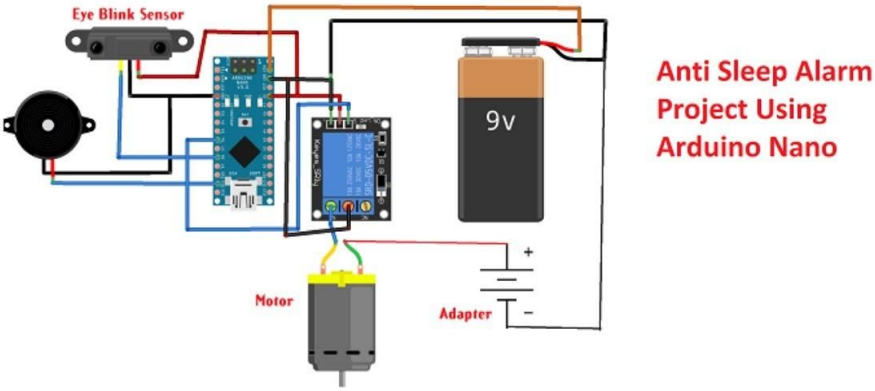

5 Conclusion and Future Scope

The future of anti-sleep glasses is exciting and full of opportunities for innovation. Here are a few potential directions for their development:

- Advanced Drowsiness Detection Algorithms: As machine learning techniques continue to evolve, anti-sleep glasses could incorporate more sophisticated algorithms that learn and adapt to an individual's unique patterns of fatigue.

- Integration with Other Wearable: The future of anti-sleep glasses could involve integration with other devices, such as smartwatches or fitness trackers. For instance, if a smartwatch detects that the user didn't get enough sleep, the glasses could preemptively provide more frequent alerts.

- Augmented Reality (AR) Capabilities: Future anti-sleep glasses might evolve to incorporate augmented reality features. By integrating AR, the glasses could project visual prompts or information to alert the user in a more engaging way.

- Enhanced User Experience and Comfort: Future designs may focus on making anti-sleep glasses lighter, more stylish, and comfortable for prolonged use. Innovations in materials and ergonomics, such as lightweight frames or smart lenses that adjust to the wearer's vision. • Commercial and Industrial Applications: The potential applications for anti-sleep glasses are vast. In industries where workers need to stay alert for extended periods—such as transportation, healthcare, and manufacturing—these glasses could become essential safety tools. Future iterations of the technology could be customized to suit specific industries, incorporating features such as real-time reporting to supervisors, tracking of cumulative fatigue over shifts, and integration with workplace safety systems.

- In conclusion, while anti-sleep glasses already have useful applications, their future development holds much promise. As technology advances, these glasses could evolve into an indispensable tool for not only preventing fatigue-related accidents but also improving overall health and productivity in various professional and personal contexts.

6 References

1. Reference 1 https://tinyurl.com/m2ju4zjv
2. Reference 2 https://tinyurl.com/3w8885z4